Catalog Number: MC0408B120T2

Features and Ratings

- Outdoor Type 3R Enclosure
- 200A Continuous Meter Socket
- 200A Main Breaker factory installed
- Bus Rating: 225A Max.
- Ring Type Meter Cover
- 120/240 Volts~ 1 Phase, 3 Wire ; 208Y/120 Volts~ 1 Phase, 3 Wire (Derived from 3 phase - 4 wire system, 5th jaw may be required)
- 4 Spaces, 8 Circuits Max.
- Feed-Thru Terminals Installed
- Overhead or Underground Service
- 22,000 AIC Max. Rated (See Diagram for Details)
- RX Type Hubs Top End Wall w/Cover Plate Installed
- HC Type Hubs Bottom End Wall

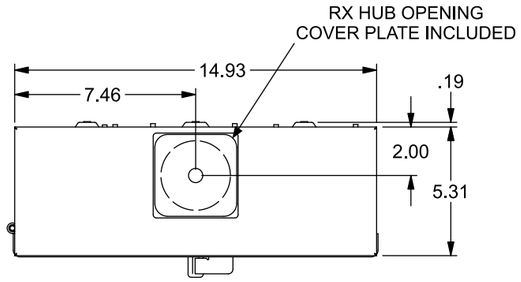

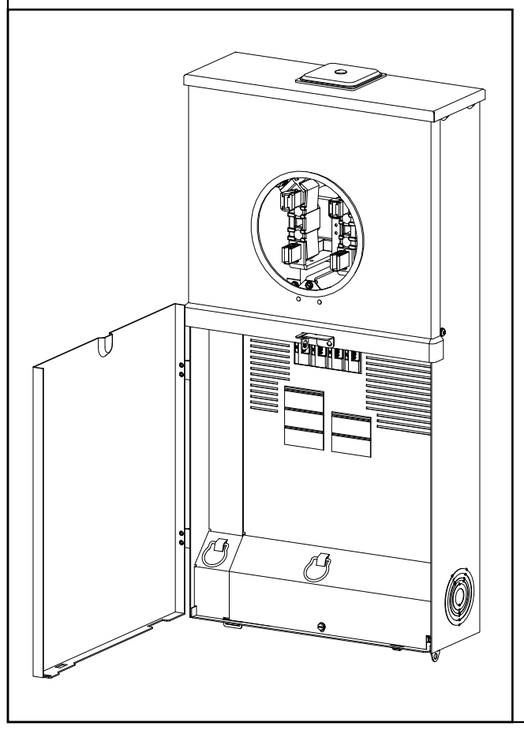

VIEW SHOWN WITH DOOR REMOVED

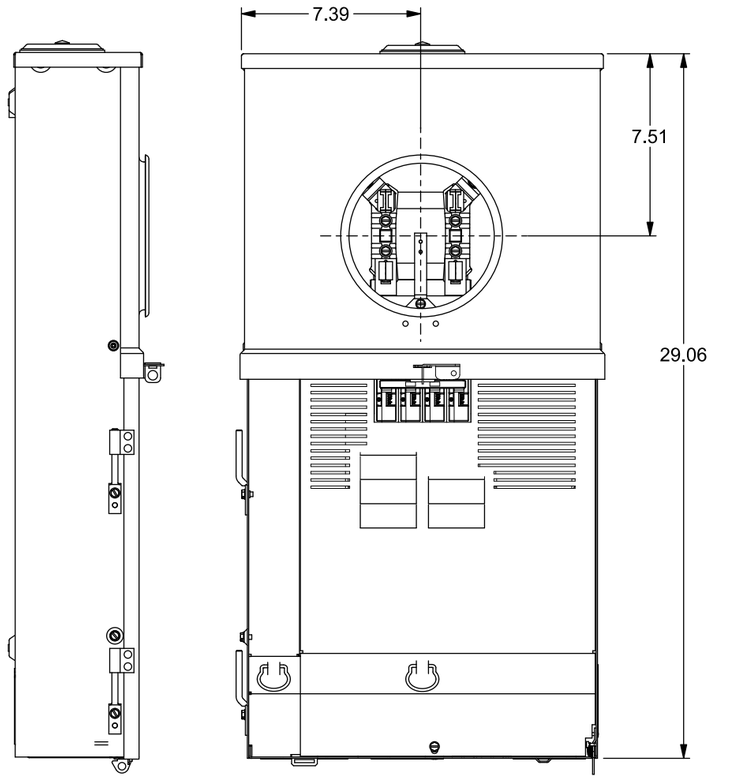

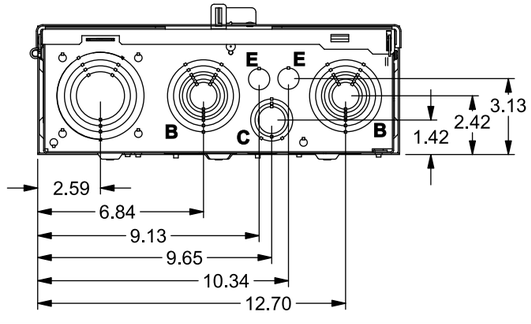

VIEW SHOWN WITH DEADFRONT, COVER, AND DOOR REMOVED

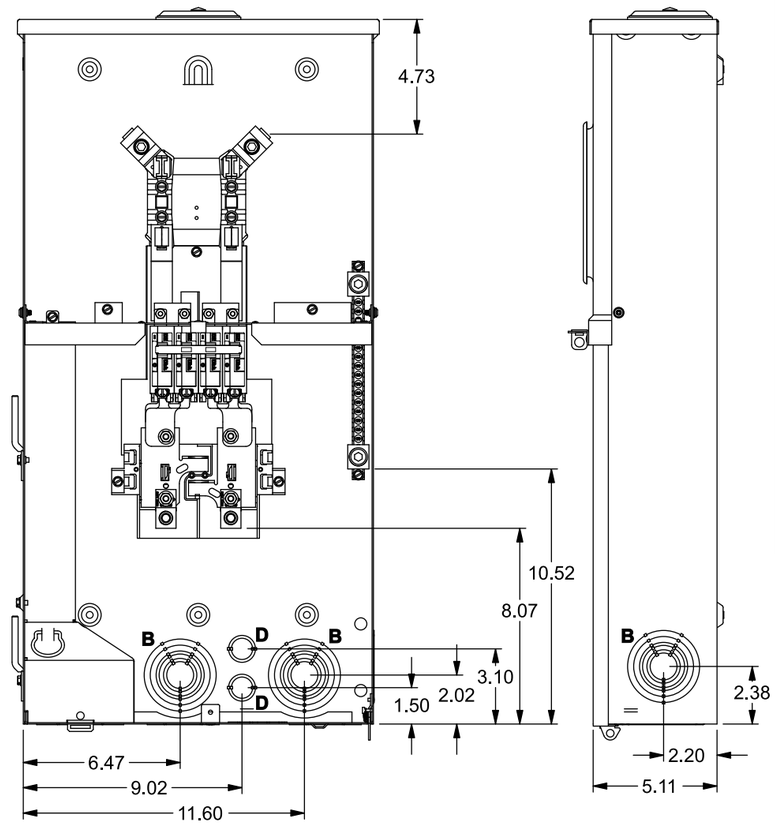

Accessories

Filler Plate: Cat. No. QF3 or ECQF3
2/0-#4 Lug Kit: ECLK1-2 (Torque 45 lb-ins.)
5th Jaw Kit: Cat. No. EC5J2
Mechanical Breaker Interlock: ECSBPK09
Equipment Grounding Bars: Type ECGB

Trade size (in)	Catalog number
RX Type Hub (top endwall)	
1 ¼"	EC38597
1 ½"	EC38598
2"	EC38599
2 ½"	EC38600
HC Type Hub (bottom endwall)	
2"	ECHC200
2 ½"	ECHC250
3"	ECHC300

Schematic, Torques & Wire Sizes

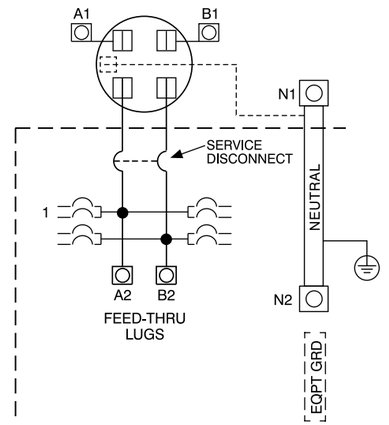

Terminal	Wire Size	Torque
A1, B1	350 kcmil - #6	250 lb-in
N1, N2	300 kcmil - #4	250 lb-in
A2, B2	300 kcmil - #4	250 lb-in
Branch Breaker Terminals	See Markings on Breaker	
Neutral Bar	#10 - #14 CU	20 lb-in
	#10 - #12 AL	20 lb-in
	#8	25 lb-in
	#6 - #4	35 lb-in
Ground Conductors Only	(2) or (3) #14 AWG	20 lb-in
	(2) #12-#10 AWG	20 lb-in

Maximum breaker size on left side:
60°C Wire: CU 55A, AL 40A
75°C Wire: CU 65A, AL 50A

K.O. CHART		
DESIGNATION	QTY	DESCRIPTION
A	1	3", 2-1/2", 2", 1-1/2" KO with Provision for HC Type Hub
B	5	2-1/2", 2",1-1/2", 1-1/4", 1", 3/4" KOs
C	1	1-1/4", 1", 3/4" KOs
D	2	3/4", 1/2" KOs
E	2	1/2" KO

© 2024 Copyright Siemens Industry, Inc.

SIEMENS
Siemens Industry, Inc.

Meter Load Center Combination

Description: 200A, 1 Phase, 4 Pos, 8 Ckt, Ring Type, OH/UG, Feed-Thru w/Lugs

KAM 2/8/24	DO NOT SCALE DRAWING	Dwg. No. MC0408B120T2

FamT 16x